M27 – Binary Outputs Low Side Switch

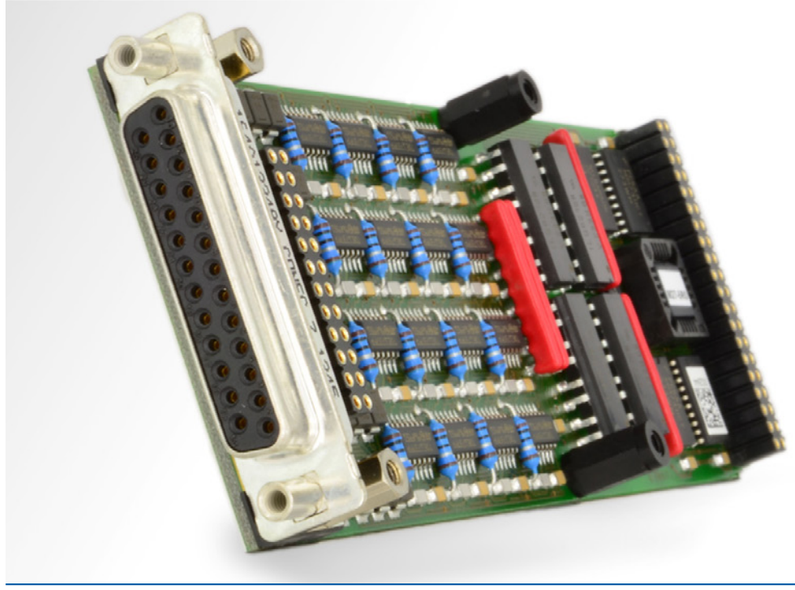

Features

- 16 individual programmable digital outputs
- Bipolar transistor technology, fast switching
- Open collector outputs
- Suppressor diode protection against inductive loads
- 500mA per channel
- Optically isolated outputs
- Common ground

Use Cases

- Switching high-voltage/high-current loads via relays
- Process status display by switching LEDs
- Switching other loads up to 500mA

Block Diagram

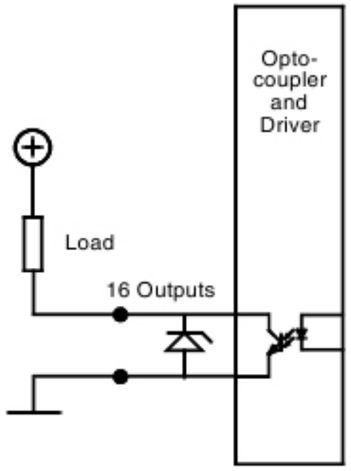

Technical Data

Output channels	• 16 digital outputs • Open collector, bipolar transistor outputs • Lowside switch (load on supply voltage) • 8..36V; 10µA max (open) • 2V max.; 500mA (closed) • Common ground
Galvanic isolation	Optical isolation for each channel
Protection features	• Thermal and short circuit protection • Suppressor diodes – protect against inductive loads
Connector	25-pin D-Sub connector (female)

Order Information

Order Number	IO-M27

Alternatives

M409	Providing digital and analog IOs
M441	With 16 channel high-end PWM outputs
M28	For a high-side switch variant
M66 and M81	